VS11-LE

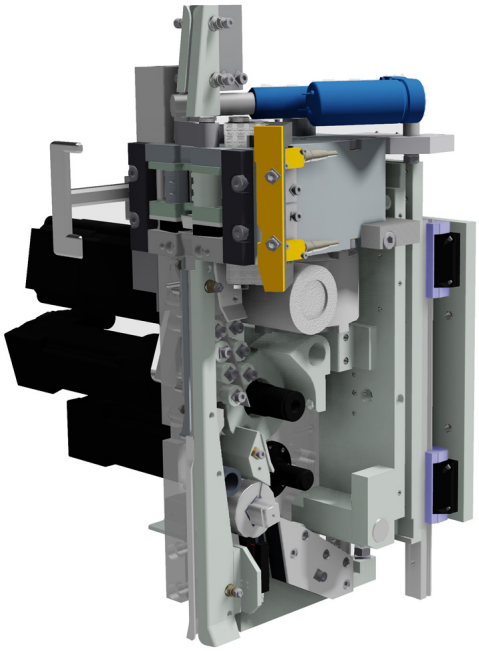

Contact

Jutta Geurtz
+49 2336 808 364
jgeurtz@titan-schwelm.de

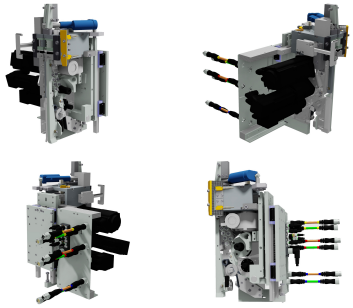

With strength, without seal

The VS11-LE head is the perfect partner for all steel strapping applications up to a strap width of 19 mm that demand the highest precision and speed.
This head works with the patented TITAN sealless joint and therefore stands for the highest reliability in joining. Thanks to the high strap-transport speed of the VS11-LE, you benefit from maximum efficiency and effectiveness when strapping flat packages.
The high-tech servo drive ensures exact head control. Due to its simple, robust and maintenance-friendly technology on a purely electrical basis, the VS11-LE is extremely durable in practical use.
The VS11-LE works like a clockwork.

Technical Data

Kind of drive	Electric
Tension force	1,000 - 10,000 N (adjustable)
Mains voltage	400 V - 50 Hz
Control voltage	24 V
Connected load	5.5 kW
Strap conveying speed	3.6 m/s 11.8 ft/s
Dimensions	570 x 470 x 290 mm (L x W x H) 22.4 x 18.5 x 11.4" (L x W x H)
Weight	120 kg 264.5 lb

Copyright TITAN Umreifungstechnik, GmbH & Co. KG | Berliner Straße 51-55 | 58332 Schwelm | Deutschland
Contakt: Jutta Geurtz | +49 2336 808 364 | jgeurtz@titan-schwelm.de

Temperature range (Hot / Cold)	Cold

Strap/Joint

Type of strap	Steel strap
Strap	Automatenband MEGABAND® Megaflex Niro
Strap width	13, 16, 19 mm 1/2" ; 5/8" ; 3/4"
Strap thickness	0.50 - 0.63 mm 0.02 - 0.025"
Kind of seal	Sealless-joint
Sealing strength (depending on strap quality, strap dimensions)	up to 85% of the strap breaking load

Minimum bearing area

Expansive package	120 mm 4.7"
Slit coil ring	120 mm 4.7"
Hexagon pipe bundle	140 mm 5.5"
Round package	Ø 500 mm Ø 19.7"

Application

Light-duty strapping applications; for strapping of slit coils, sheet packages, bricks, structural timber, bundles of profiles, etc.

Copyright TITAN Umreifungstechnik, GmbH & Co. KG | Berliner Straße 51-55 | 58332 Schwelm | Deutschland
Contakt: Jutta Geurtz | +49 2336 808 364 | jgeurtz@titan-schwelm.de